Valena™ IN'MATIC
7 530 38 / 39 / 68

legrand®

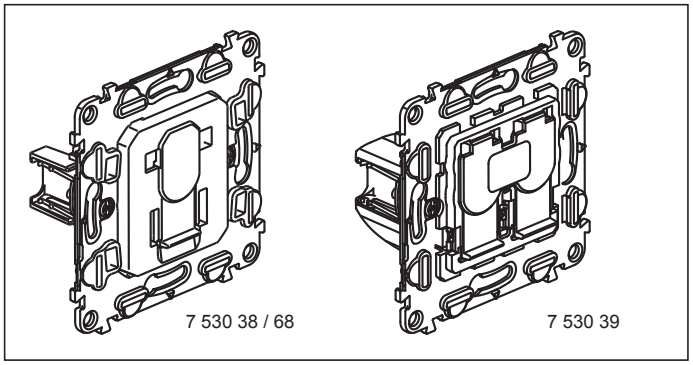

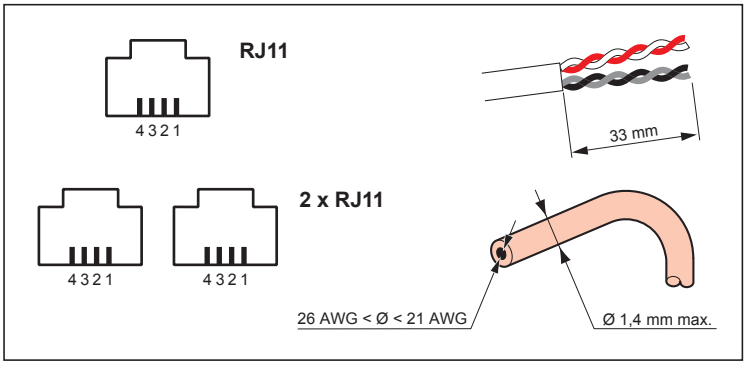

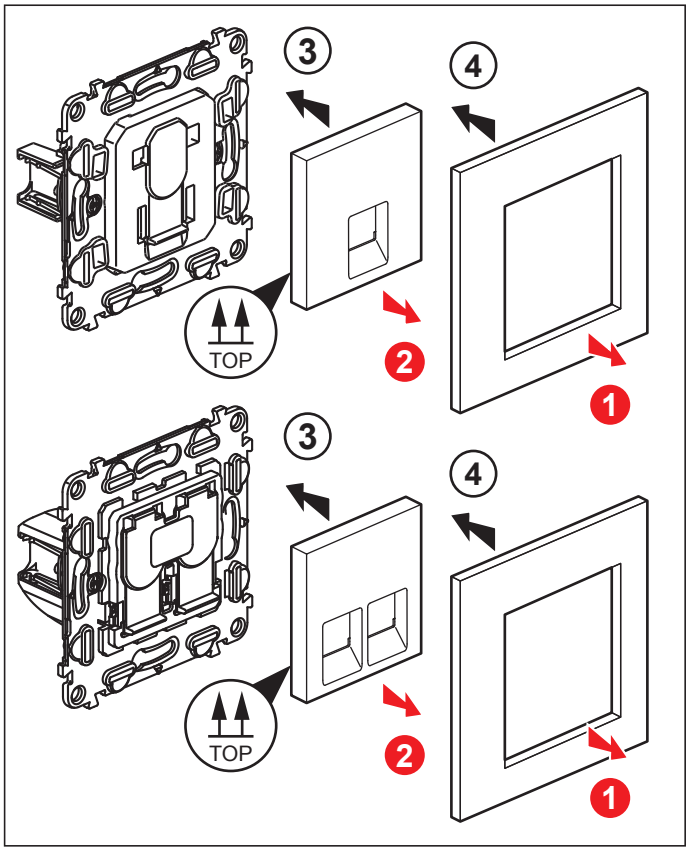

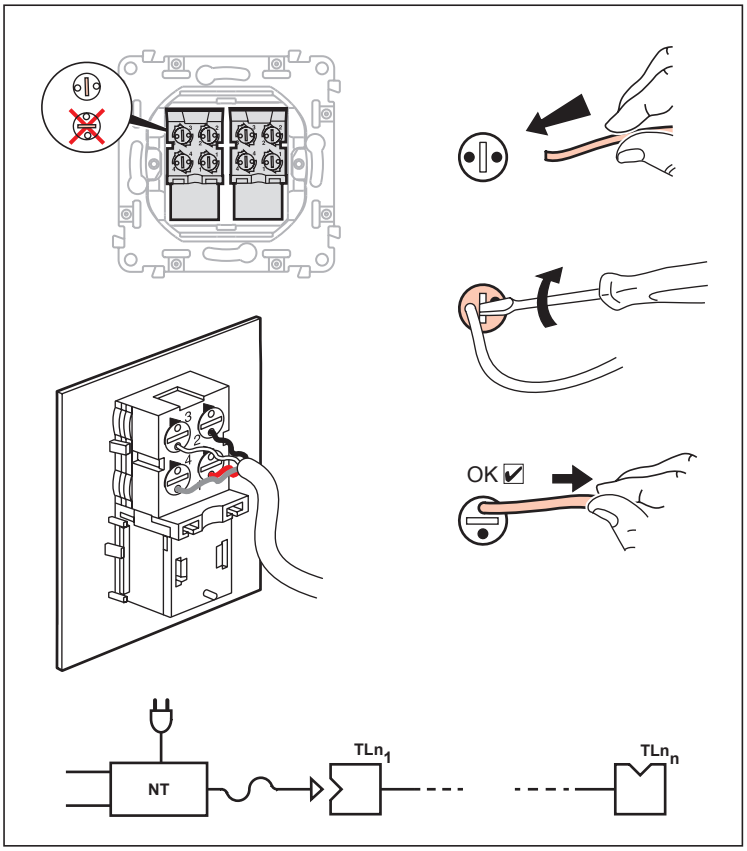

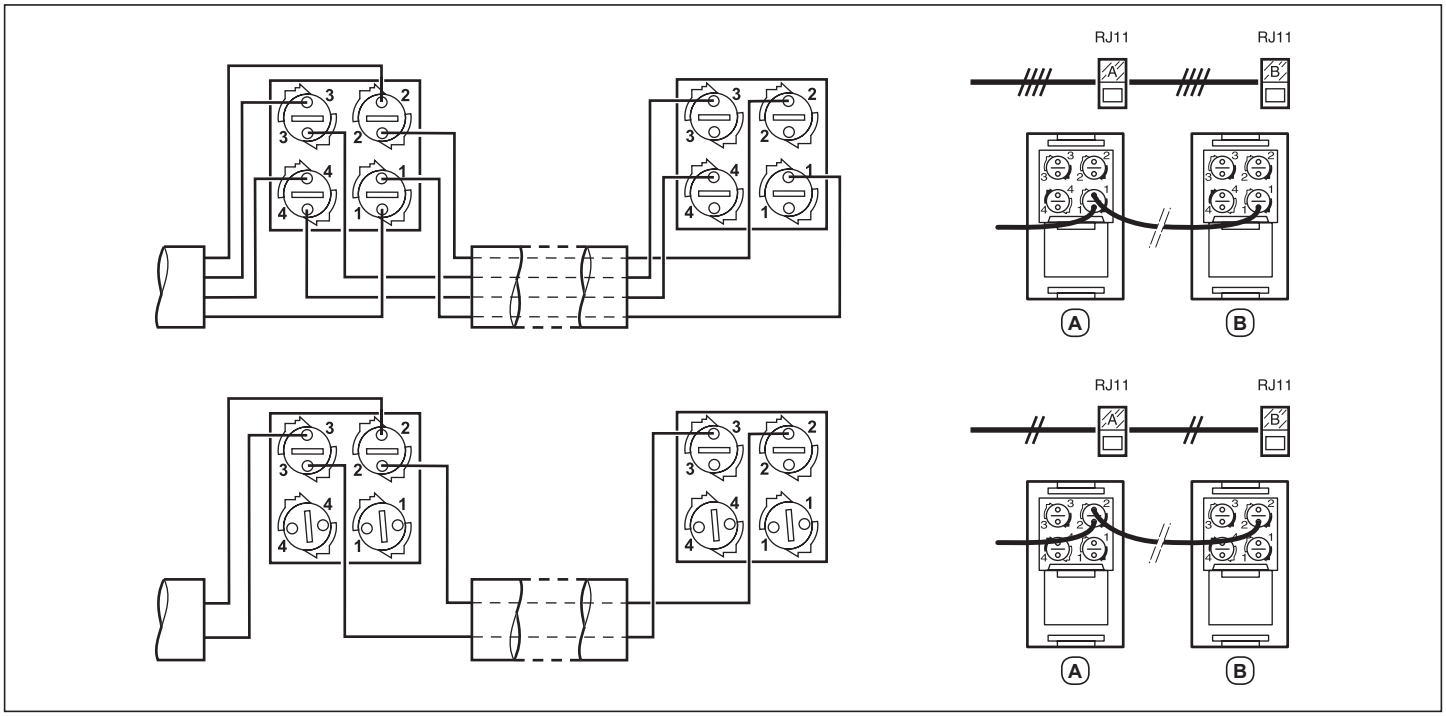

LE07422AB